THREADFORM PROPERTIES	
LEAD	.28571 in (3.5 TPI)
	+ .006 OVER 2 INCHES
TAPER	1.250 in/ft (.1042 in/in)

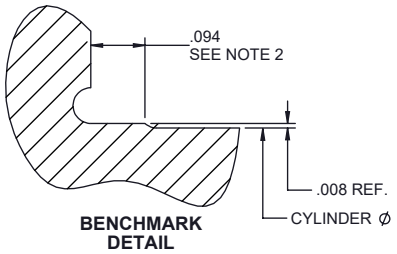

BENCHMARK DETAIL

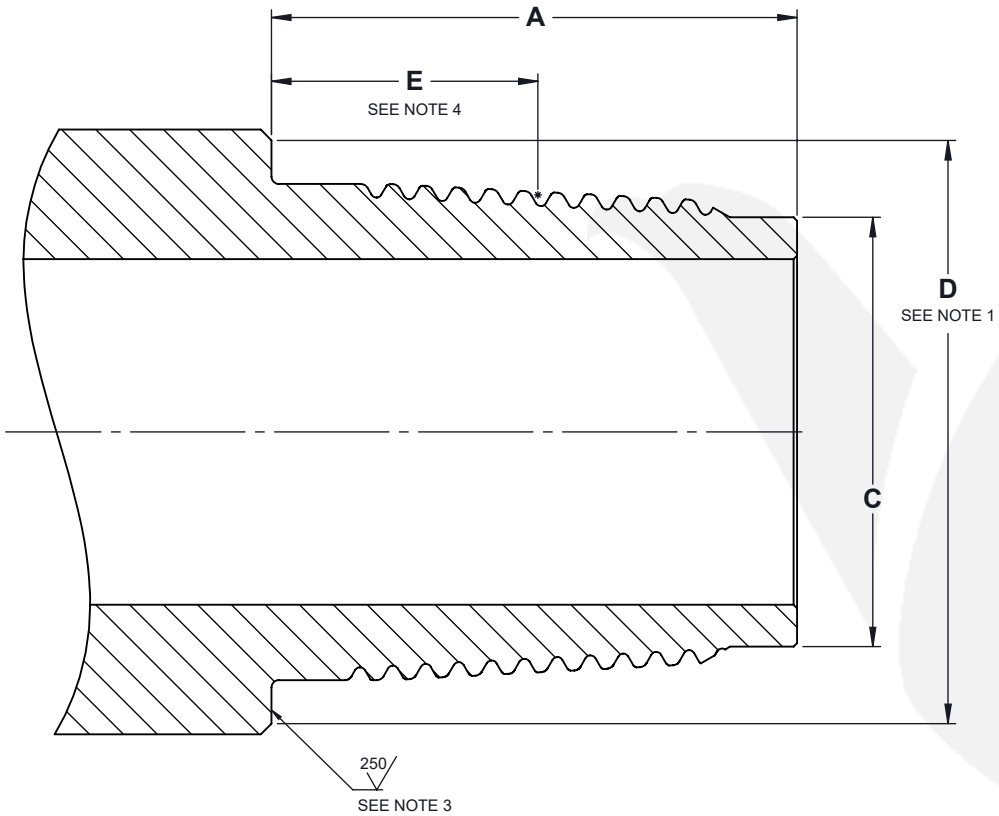

DLC PIN FIELD INSPECTION DIMENSIONS

CONNECTION	A *PIN LENGTH*		C *PIN NOSE*		D *BEVEL DIA.*		E *ROOT DAMAGE REGION*	OD *MIN*
	MIN	MAX	MIN	MAX	MIN	MAX	DISTANCE	SEE NOTE 5
DLC 425	4.554	4.565	3.712	3.759	5.048	5.268	2.313	4.914
DLC 544	5.116	5.127	4.846	4.893	6.381	6.601	2.625	6.232

NOTES:

1. MIN BEVEL CHAMFER OF 1/32" X 45° TO BE PRESENT FOR REDUCED OD AND/OR REFACED CONNECTION
2. .094 IS FOR NEW CONDITION, MAY BE .188 MAX AFTER REFACING
3. SURFACE FINISH APPLIES DURING REFACING OPERATIONS
4. DAMAGE TO THREAD ROOTS NOT PERMITTED IN THIS REGION
5. MIN OD FOR REFERENCE BASED ON MIN BOX COUNTERBORE WALL THICKNESS

REVISIONS			
REV.	DESCRIPTION	DATE	REV. BY
1	CONVERTED TO LIMIT TOLERANCING	12/11/2025	SC

VALORA engineering

TITLE

DLC PIN FIELD INSPECTION

SCALE NONE

SHEET 1 OF 1

DIMENSIONS IN INCHES UNLESS OTHERWISE SPECIFIED

DRAWN	SC	MAY 3/23
CHECKED	GT	MAY 8/23

DRAWING NO. T000140

REVISION 1

THIS DRAWING AND DATA CONTAIN PROPRIETARY INFORMATION WHICH IS CONFIDENTIAL PROPERTY OF VALORA ENGINEERING LTD. AND SHALL NOT BE COPIED, REPRODUCED, DISCLOSED TO OTHERS, OR USED IN WHOLE OR IN PART FOR ANY PURPOSE WITHOUT EXPRESS WRITTEN PERMISSION. THIS DRAWING IS LOANED IN CONFIDENCE WITH THE UNDERSTANDING THAT IT SHALL BE RETURNED ON DEMAND.